ABSTRACT

This project presents a detailed comparative analysis of various multiplier architectures using 90nm technology in Cadence. The primary goal was to evaluate the performance metrics—power consumption, delay, and transistor count—of four widely used multiplier designs: the Array multiplier, Wallace tree multiplier, Vedic multiplier, and Booth multiplier. Each of these multipliers was implemented and simulated within the Cadence environment, and their performance was systematically compared to identify the optimal architecture for low-power and high-performance applications.

The Array multiplier, known for its simple design, offers ease of implementation but exhibits relatively higher delay and power consumption due to its straightforward approach. The Wallace tree multiplier, on the other hand, reduces the delay by employing a more efficient reduction tree structure, but this improvement comes at the cost of higher transistor count. The Vedic multiplier, inspired by ancient Indian mathematics, introduces a more complex but efficient approach to multiplication, offering significant improvements in both delay and power consumption over traditional methods, though its implementation requires more resources. Finally, the Booth multiplier, renowned for its efficiency in handling signed numbers, demonstrated a balanced trade-off between delay and power consumption, but its complexity made it more resource-intensive compared to the simpler Array multiplier.

Each multiplier design was assessed in terms of their suitability for different applications, considering the constraints of modern VLSI systems, such as chip area, power efficiency, and computational speed. The results show that while the Wallace tree and Vedic multipliers are optimal for applications requiring speed, the Booth and Array multipliers offer advantages in low-power scenarios where simplicity is crucial. This comparative analysis provides valuable insights into selecting the most appropriate multiplier architecture for specific use cases in modern digital systems.

In conclusion, this project highlights the trade-offs inherent in each multiplier design and offers recommendations based on the specific performance requirements of various digital applications. The findings are intended to assist engineers and researchers in making informed decisions about multiplier selection when designing energy-efficient and high-speed VLSI circuits.

TABLE OF CONTENTS

	Content	Page No.
1.	**Concept of the project**	**5**
1.1	Introduction to project	5
1.2	Motivation	6
1.3	Problem Statement	6
1.4	Literature survey	7
1.5	Objectives	8
1.6	Areas of Application	8
1.7	Benefits	9
2.	**Design of the project**	**10**
2.1	Architectural Design	10
2.1.1	4 Bit Array Multiplier	10
2.1.2	4 Bit Wallace Tree Multiplier	11
2.1.3	4 Bit Vedic Multiplier	11
2.1.4	4 Bit Booth Multiplier	12
3.	**Implementation of the project**	**13**
3.1	Components/tools used	13
3.2	Schematic Illustration and Waveforms in Cadence tool	14
3.2.1	4 Bit Vedic Multiplier	14
3.2.1.1	Schematic	14
3.2.1.2	Output waveform	14
3.2.2	4 Bit Wallace Tree Multiplier	15
3.2.2.1	Schematic	15
3.2.2.2	Output waveforms	15
3.2.3	4 Bit Array Multiplier	16
3.2.3.1	Schematic	16
3.2.3.2	Output waveforms	16
3.2.4	4 Bit Booth Multiplier	17
3.2.4.1	Schematic	17
3.2.4.2	Output waveforms	17
3.3	Description of Internal Components	18

3.3.1	4 Bit Ripple Carry Adder	18
3.3.2	2x2 Vedic Multiplier	18
4.	**Results of the project**	**19**
4.1	Power Consumption	19
4.2	Transistor Count	19
4.3	Delay	20
5.	**Summary**	21
6.	**Conclusion**	22

CHAPTER - 1
1. CONCEPT OF THE PROJECT

1.1 Introduction to project

In the realm of digital circuit design, multiplier circuits are indispensable components that enable arithmetic operations essential for a wide array of computational tasks. These fundamental building blocks are integral to the efficiency and functionality of digital systems, ranging from basic arithmetic to complex mathematical computations. Multipliers are ubiquitous in digital integrated circuit design and are particularly critical in Digital Signal Processing (DSP) and machine learning applications, where they form the backbone of arithmetic units. Consequently, a deep understanding of the characteristics and performance of various multiplier circuits is crucial for the design of optimized digital systems.

This project leverages 90nm CMOS technology to design and analyze various multiplier architectures using Cadence design tools. The choice of 90nm technology ensures a realistic evaluation of performance metrics, aligning with modern semiconductor processes. By evaluating parameters such as propagation delay, power consumption, area, and design complexity, we can gain insights into the trade-offs and advantages of each architecture. This exploration will aid in selecting the most suitable multiplier type for specific applications, contributing to the development of more efficient and effective digital circuits.

Our investigation includes a diverse spectrum of multiplier architectures, each with its unique design philosophy and performance characteristics:

4-bit Wallace Tree Multiplier: Known for its parallel computation, this multiplier minimizes intermediate stages, making it highly efficient for high-speed operations.

4-bit Booth Multiplier: Utilizes a signed multiplication approach with reduced partial products, optimizing power and area.

4-bit Array Multiplier: Employs a straightforward structure with consistent performance, suitable for applications requiring simplicity and reliability.

4-bit Vedic Multiplier: Using the Urdhva Tiryakbhyam technique from Vedic mathematics, the 4-bit Vedic Multiplier performs fast parallel multiplication with minimal hardware overhead. Its simplified structure and reduced computation steps make it highly efficient for digital circuit implementations.

1.2 Motivation

The motivation for this project stems from the pivotal role that multipliers play in the design and functionality of digital systems. As fundamental building blocks in digital integrated circuits, multipliers are crucial for executing arithmetic operations, which are at the core of numerous computational tasks. This importance is particularly evident in Digital Signal Processing (DSP) applications, where efficient multiplication directly impacts the overall performance and energy efficiency of the system.

In modern digital design, optimizing performance, reducing power consumption, and minimizing area are critical objectives. Each multiplier architecture offers unique advantages and trade-offs in these aspects. For instance, some multipliers prioritize speed by minimizing propagation delay, while others focus on reducing power consumption or the silicon area used. Understanding these trade-offs is essential for designing high-performance, low-power digital systems.

Additionally, the rapid advancement of semiconductor technology and the increasing complexity of digital circuits necessitate a thorough analysis and comparison of various multiplier designs. By leveraging Cadence design tools, this project aims to provide a detailed evaluation of multiple multiplier architectures, including Vedic, Wallace Tree, and other advanced multiplier structures. Such a comparative study will offer valuable insights into the strengths and weaknesses of each design, guiding engineers and researchers in selecting the most appropriate multiplier for their specific applications.

Ultimately, the goal is to contribute to the development of more efficient digital systems by identifying the optimal multiplier architectures that balance speed, power consumption, and area. This project not only enhances our understanding of different multiplier designs but also aids in advancing the field of digital circuit design through informed decision-making and innovative engineering solutions.

1.3 Problem Statement

In the realm of digital circuit design, selecting the appropriate multiplier architecture is critical for achieving optimal performance and resource utilization in various computational tasks. This project aims to compare the performance and resource utilization of two prominent multiplier architectures using Cadence tools. Through empirical experimentation and rigorous analysis, the project seeks to contribute to the advancement of digital engineering knowledge and pave the way for more efficient and robust computing technologies. By providing a detailed comparative

analysis, this research aims to enhance the understanding of different multiplier designs and their suitability for specific applications, ultimately leading to more efficient digital systems. The findings from this study are expected to inform design choices in future digital circuits, optimizing both speed and power consumption to meet the evolving demands of modern computing applications.

1.4 Literature Survey

SL. NO	AUTHORS	YEAR	TITLE	DESCRIPTION
1.	**N.V.N.Prasanna Kumar**	2017	Design And Analysis of Booth Multiplier Using FPGA	The paper examines the structural design and implementation of various multipliers, including Braun, Wallace Tree, Baugh-Wooley, and Booth multipliers. It highlights their operational principles, efficiency, and suitability for different applications. Insights from this paper were utilized to architect a 4x4 array multiplier, leveraging its detailed discussion on multiplier structures to design a compact and efficient implementation.
2.	**R.C.Arunchander, S.Selvakumar,M.Premkumar,T.Saravanakumar**	2018	Design of High-Efficient 4*4 Multiplier using Booth Multiplier Architecture with High- Efficient Sleep Transistor Logic in 45nm Technology	The paper introduces a low-power 4x4 multiplier leveraging Booth multiplier architecture and sleep transistor logic. It demonstrates reduced power dissipation and enhanced performance through simulations using Tanner EDA, offering insights for efficient multiplier design
3.	**Yamini Devi Ykuntam, Katta Pavani, Krishna Saladi**	2020	Design and Analysis of High-Speed Wallace Tree Multiplier Using Parallel Prefix Adders for VLSI Circuit Designs	Enhanced Wallace tree multipliers with parallel prefix adders improve speed without increasing area, evaluated in terms of LUT count and delay compared to traditional designs.
4.	**Dravik Kishor Bhai Kahar, Harsh Mehta**	2017	High Speed Vedic Multiplier Using Vedic Mathematics	A Vedic multiplication algorithm using the Urdhva Tiryakbhyam method is proposed to reduce combinational path delay, enhancing digital signal processor speed.

1.5 Objectives

- **Compare Multiplier Architectures**: To perform a detailed comparative analysis of two prominent multiplier architectures using Cadence tools.
- **Evaluate Performance Metrics**: To measure and compare key performance metrics such as propagation delay, power consumption, and area for each multiplier design.
- **Optimize Design Efficiency**: To identify the strengths and weaknesses of each multiplier architecture in terms of efficiency, aiming to optimize their design for specific applications.
- **Empirical Validation**: To conduct rigorous empirical experimentation to validate the theoretical performance claims of each multiplier architecture.
- **Resource Utilization Analysis**: To assess the resource utilization of each multiplier architecture, focusing on how efficiently each design uses silicon area and power.
- **Contribute to Digital Engineering Knowledge**: To contribute valuable insights and data to the field of digital engineering, helping to inform future design decisions and advancements.
- **Support Robust Computing Technologies**: To pave the way for the development of more efficient and robust computing technologies by providing a comprehensive understanding of multiplier architectures.
- **Guidance for Future Designs**: To offer practical guidance for engineers and designers in selecting the most suitable multiplier architecture for their specific digital circuit applications.

1.6 Areas of Applications

- **Digital Signal Processing (DSP)**: Multipliers are widely used in DSP applications for tasks like filtering, image processing, audio and video compression, and encryption, where high-speed arithmetic operations are essential.
- **Communication Systems**: In wireless communication systems, multipliers play a crucial role in modulation, demodulation, and error correction processes, as well as in signal transmission and reception.
- **Machine Learning and Artificial Intelligence**: Multipliers are fundamental in neural network computations, especially in operations like matrix multiplication and convolution, which are core to AI and ML algorithms.

- **Cryptography**: Secure communication protocols often rely on multipliers for operations in encryption algorithms such as RSA and AES, where large number multiplications are needed.
- **Embedded Systems**: In embedded devices, multipliers are used in applications ranging from sensor data processing to control systems, where efficient computation is critical for performance and power consumption.
- **Image and Video Processing**: Multipliers are used in hardware accelerators for tasks like image enhancement, compression, and object recognition, making them essential in real-time video processing systems.

1.7 Benefits

- **Improved Performance**: Efficient multiplier designs can significantly reduce computation time by minimizing propagation delay, leading to faster execution of arithmetic operations, which is critical in high-speed applications like DSP and communication systems.
- **Reduced Power Consumption**: Optimized multipliers help lower power consumption, which is essential in energy-constrained applications such as portable devices, IoT systems, and embedded systems.
- **Minimized Area**: Efficient multiplier designs reduce the silicon area required for implementation, enabling more compact and cost-effective solutions, especially in applications with limited resources, like embedded systems and mobile devices.
- **Scalability**: Efficient multipliers provide better scalability for larger systems, such as machine learning models and image/video processing, where large numbers need to be multiplied and higher performance is crucial.
- **Enhanced Resource Utilization**: By optimizing the design of multipliers, systems can make better use of available resources, such as power, area, and computational speed, ensuring a balance between performance and cost.

CHAPTER – 2

DESIGN OF THE PROJECT

2.1 Architectural Design

2.1.1 4-Bit Array Multiplier:

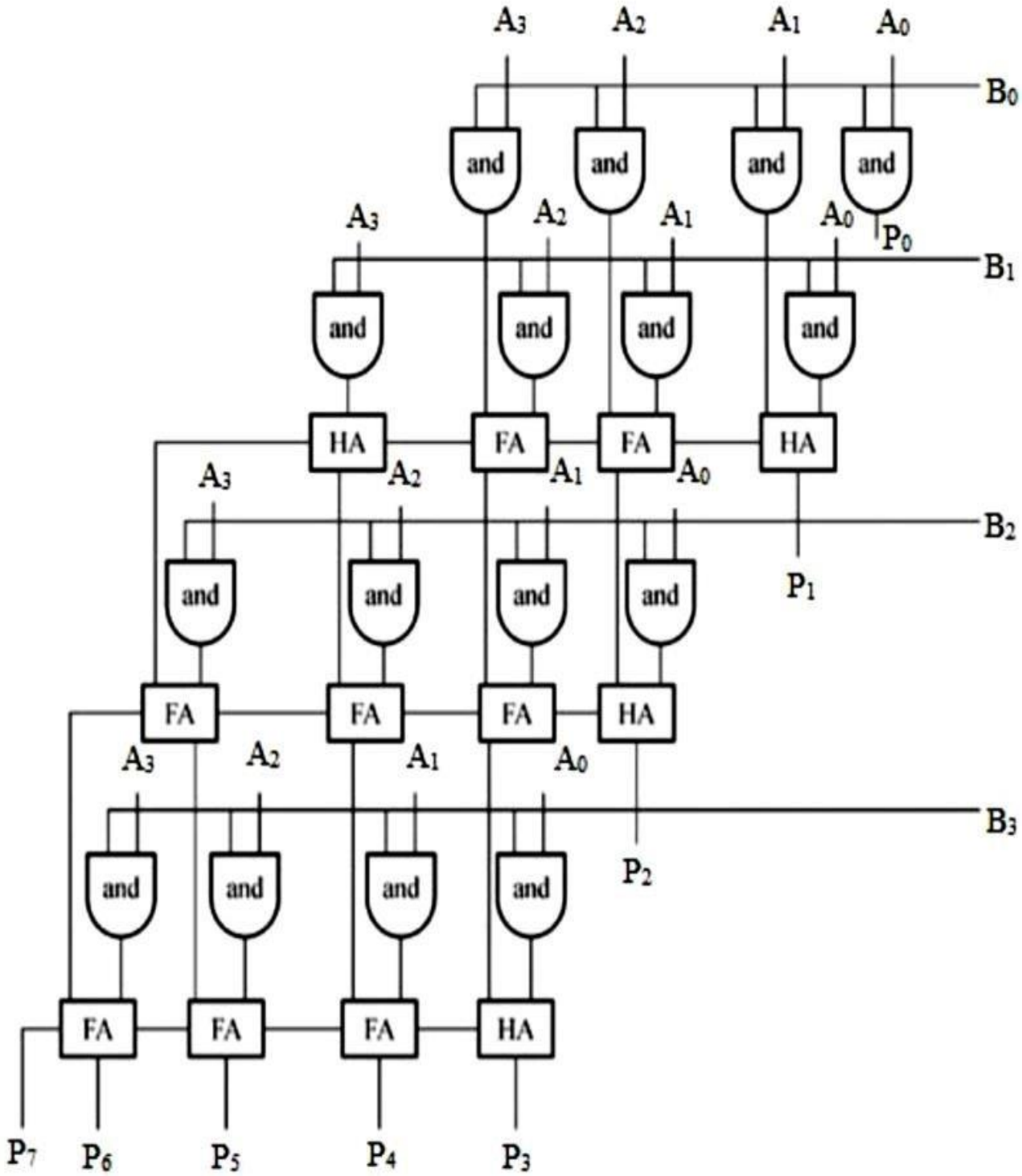

2.1.2 4-Bit Wallace Tree Multiplier:

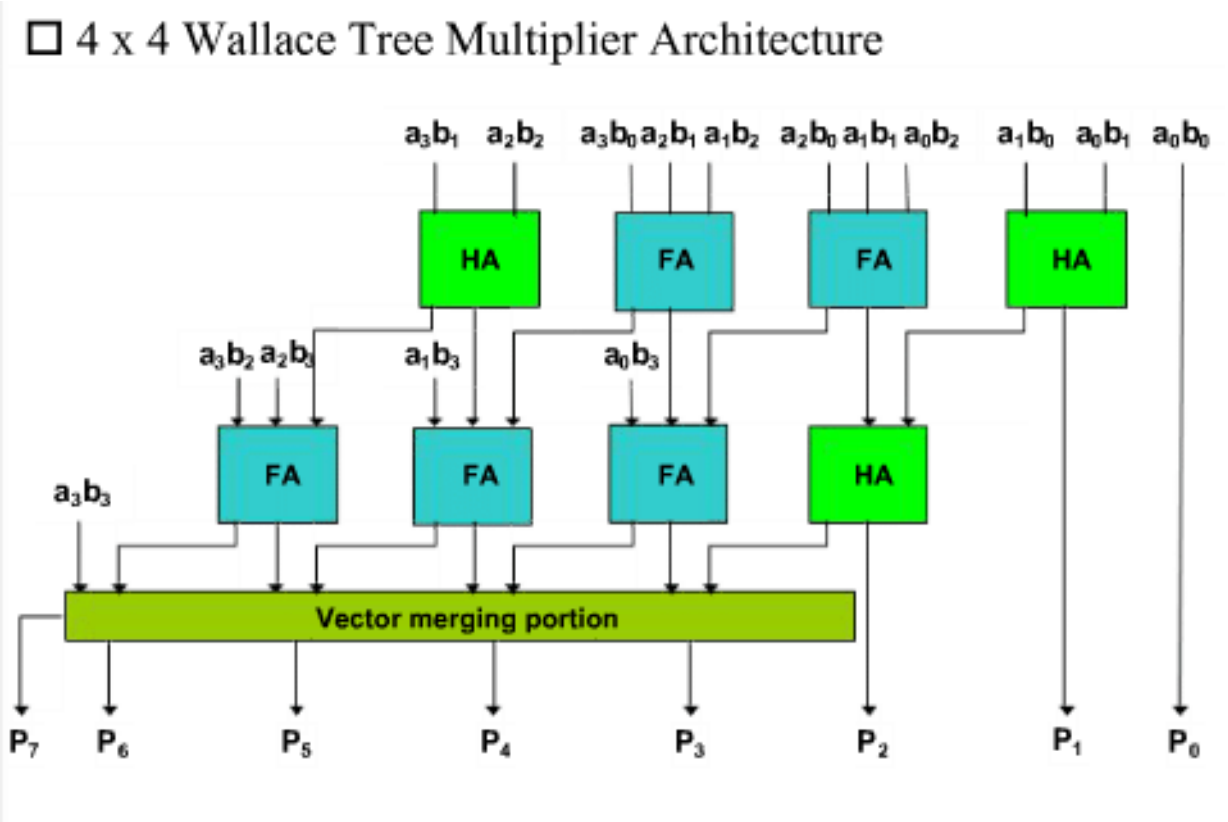

2.1.3 4-Bit Vedic Multiplier:

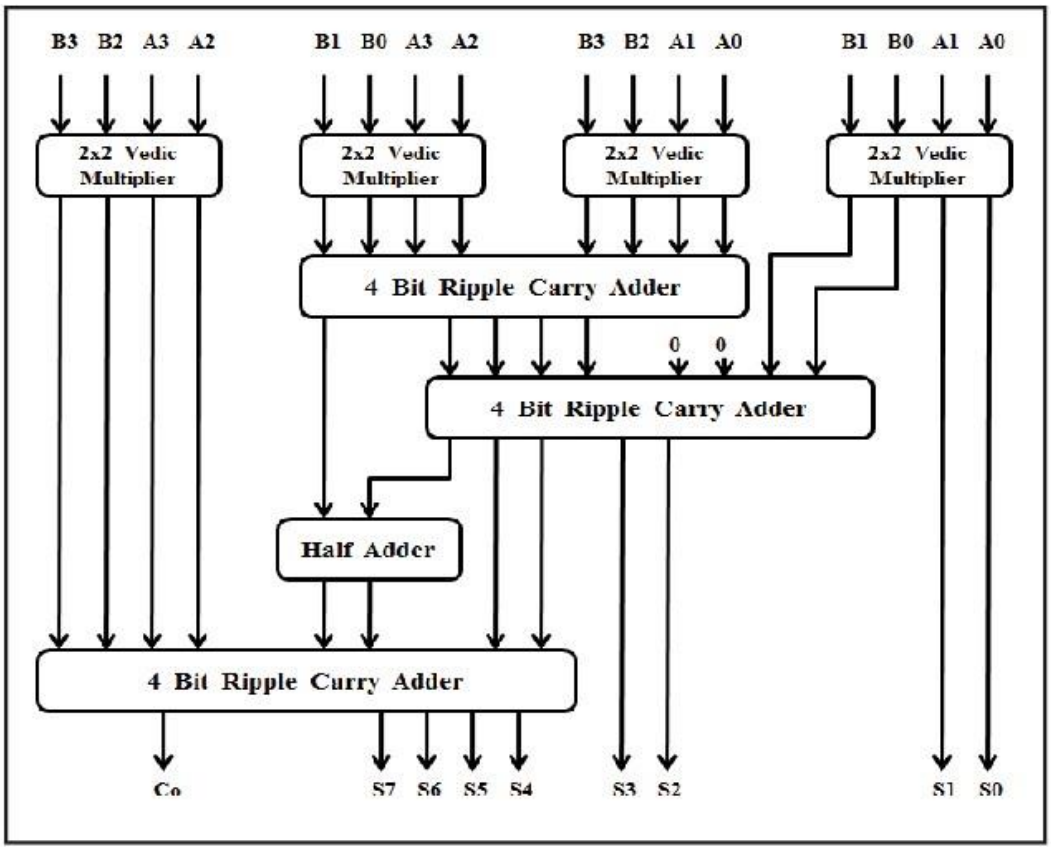

2.1.4 4-Bit Booth Multiplier:

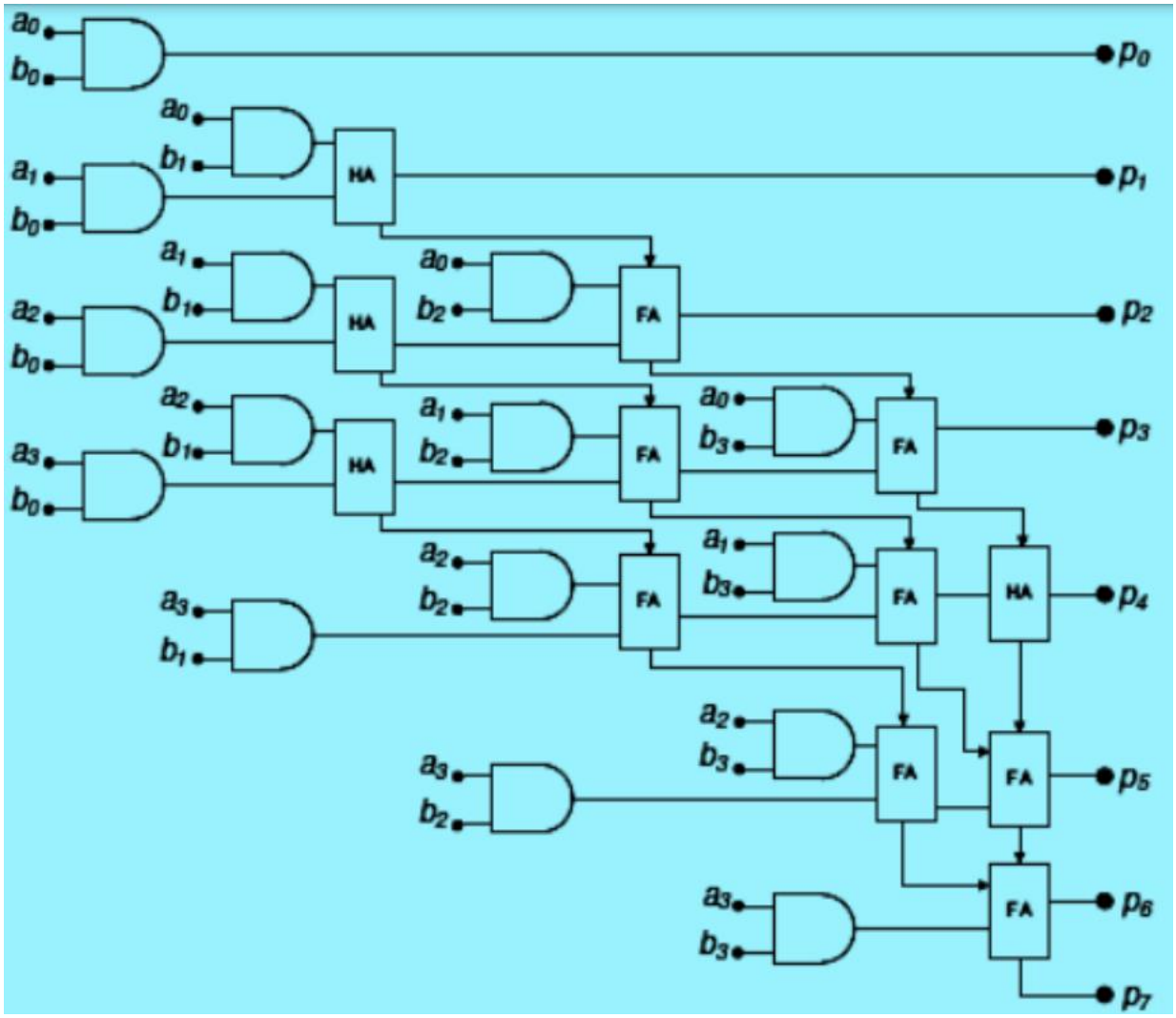

CHAPTER – 3 IMPLEMENTATION OF THE PROJECT

3.1 Components/tools used

SOFTWARE TOOLS USED :

Cadence Design Tools with GPDK 90 nm Technology:

- **Cadence Virtuoso**: Leveraged for the design and layout of digital circuits, allowing for the creation and customization of adder architectures with precision and flexibility.
- **GPDK 90 nm Technology Process**: Chosen as the technology platform for design implementation and simulation, providing a standardized and well-characterized process for modelling digital circuits at the 90 nm scale. This process technology ensures that the adder designs are compatible with modern semiconductor manufacturing processes and accurately reflect real-world performance characteristics.

cādence

3.2 Schematic Illustration and Waveforms in Cadence tool

3.2.1 4-Bit Vedic Multiplier:

3.2.1.1 Schematic

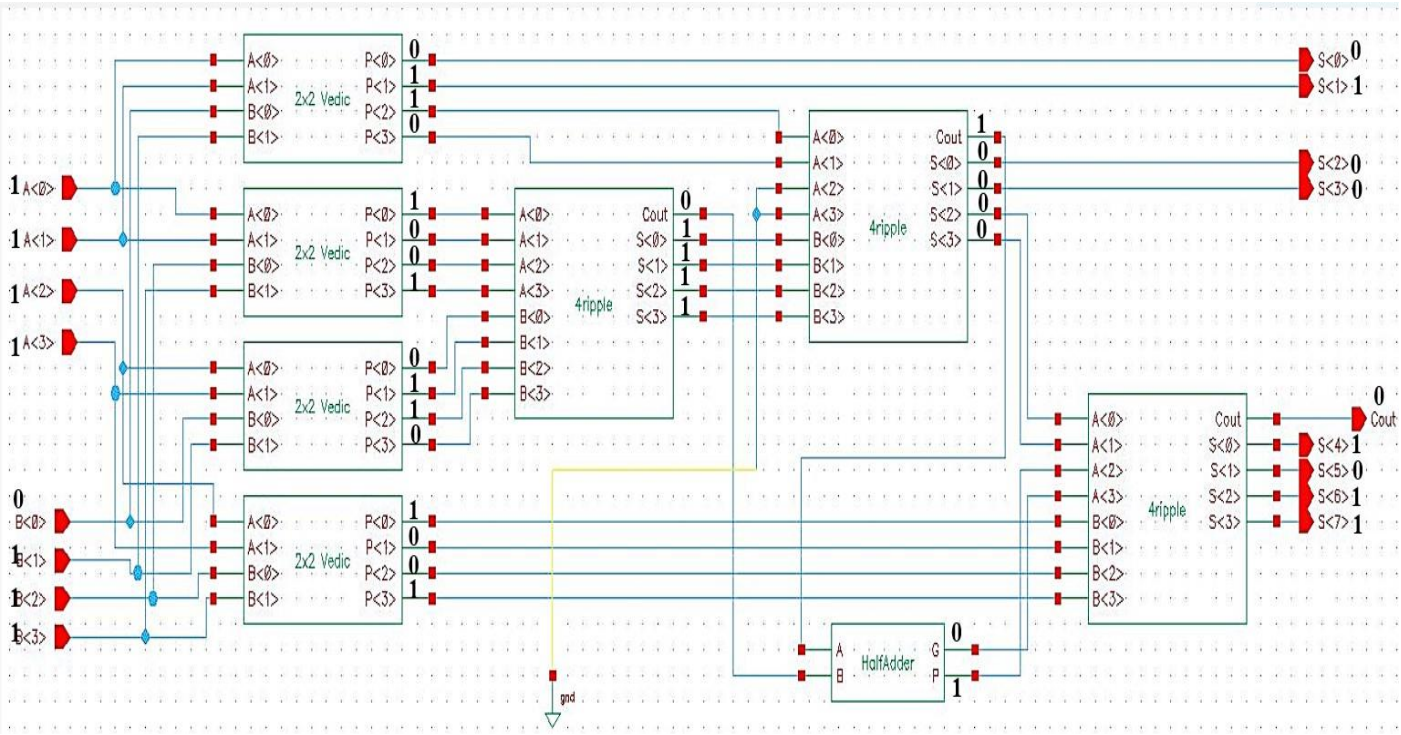

3.2.1.2 Output Waveform

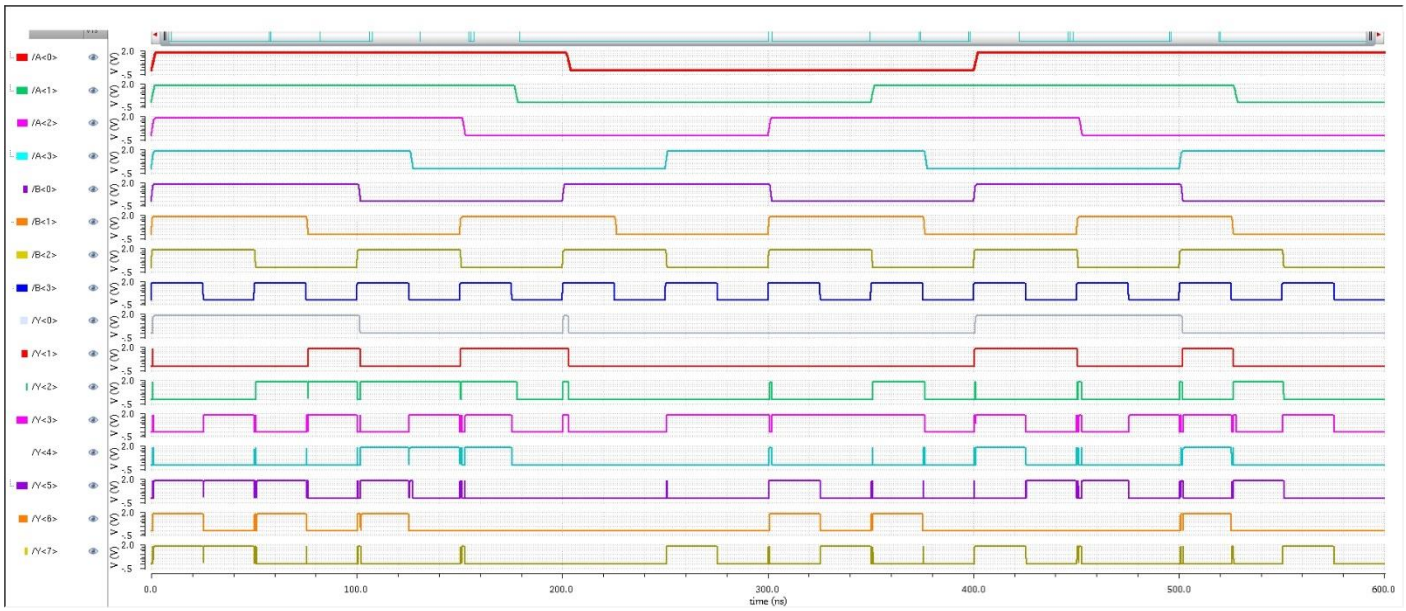

3.2.2 4-Bit Wallace Tree Multiplier:

3.2.2.1 Schematic

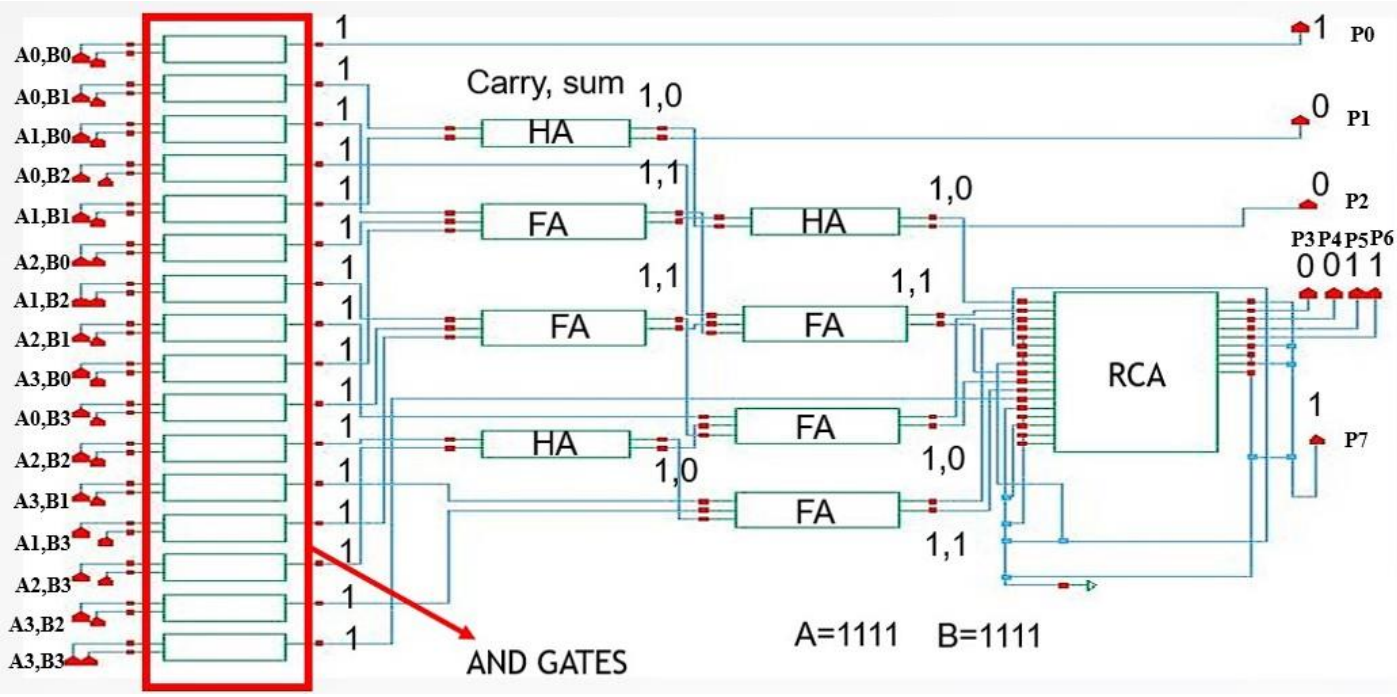

3.2.2.2 Output Waveforms

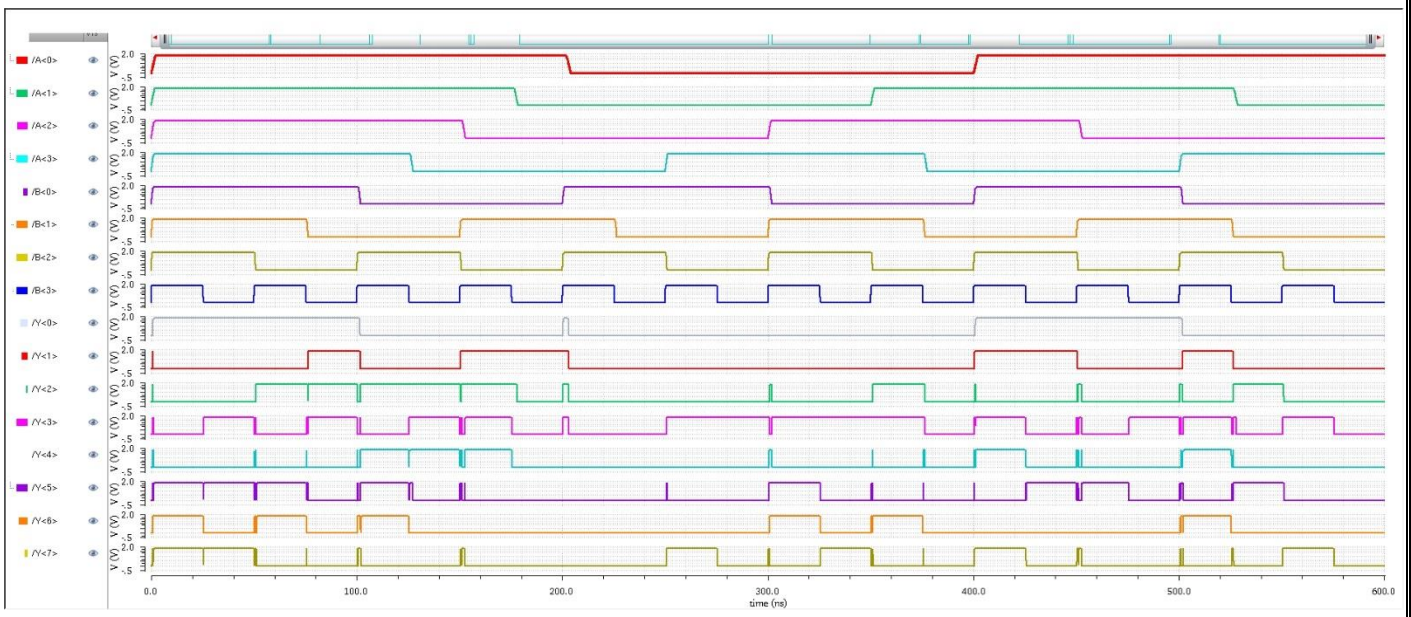

3.2.3 4-Bit Array Multiplier:

3.2.3.1 Schematic

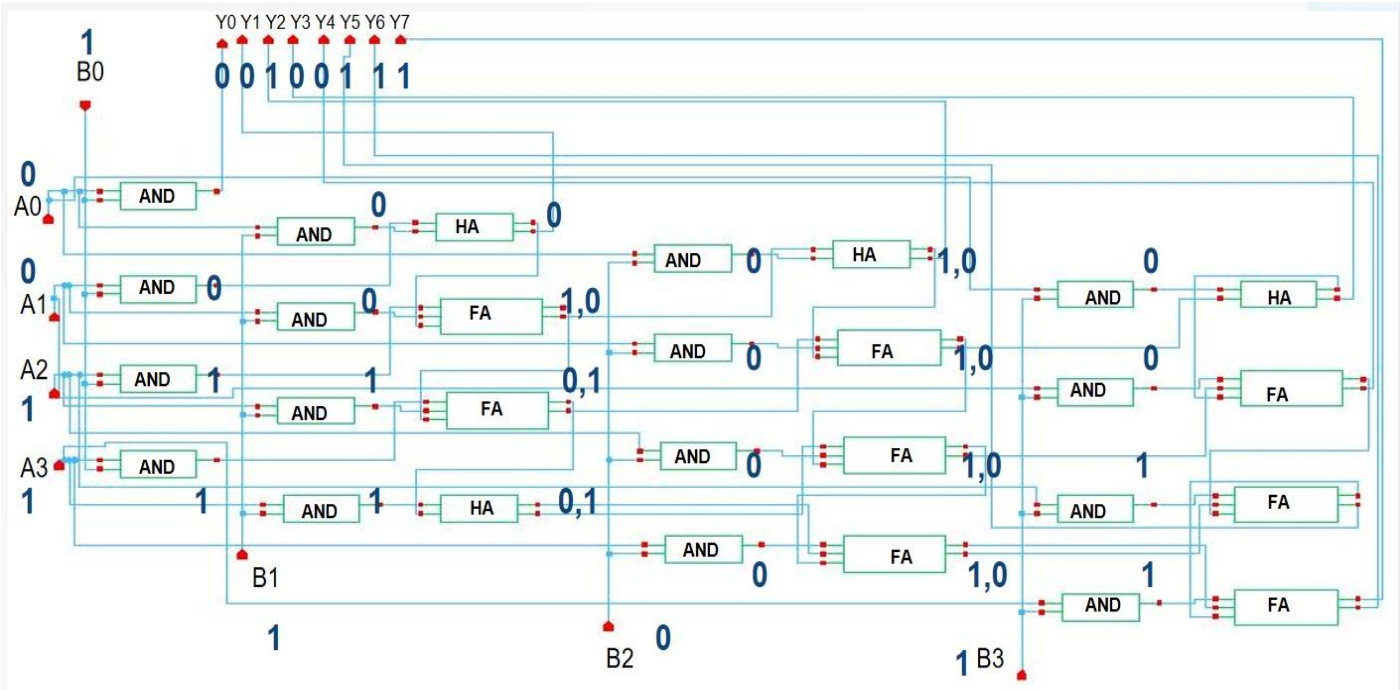

3.2.3.2 Output Waveforms

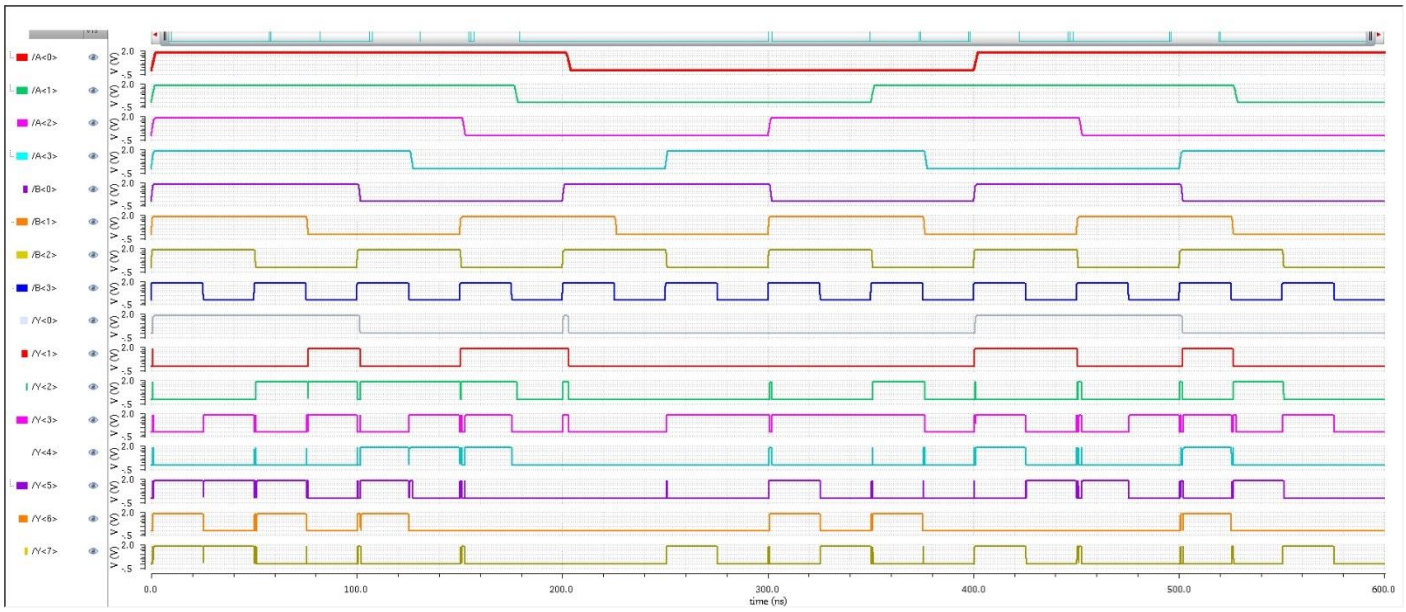

3.2.4 4-Bit Booth Multiplier:

3.2.4.1 Schematic

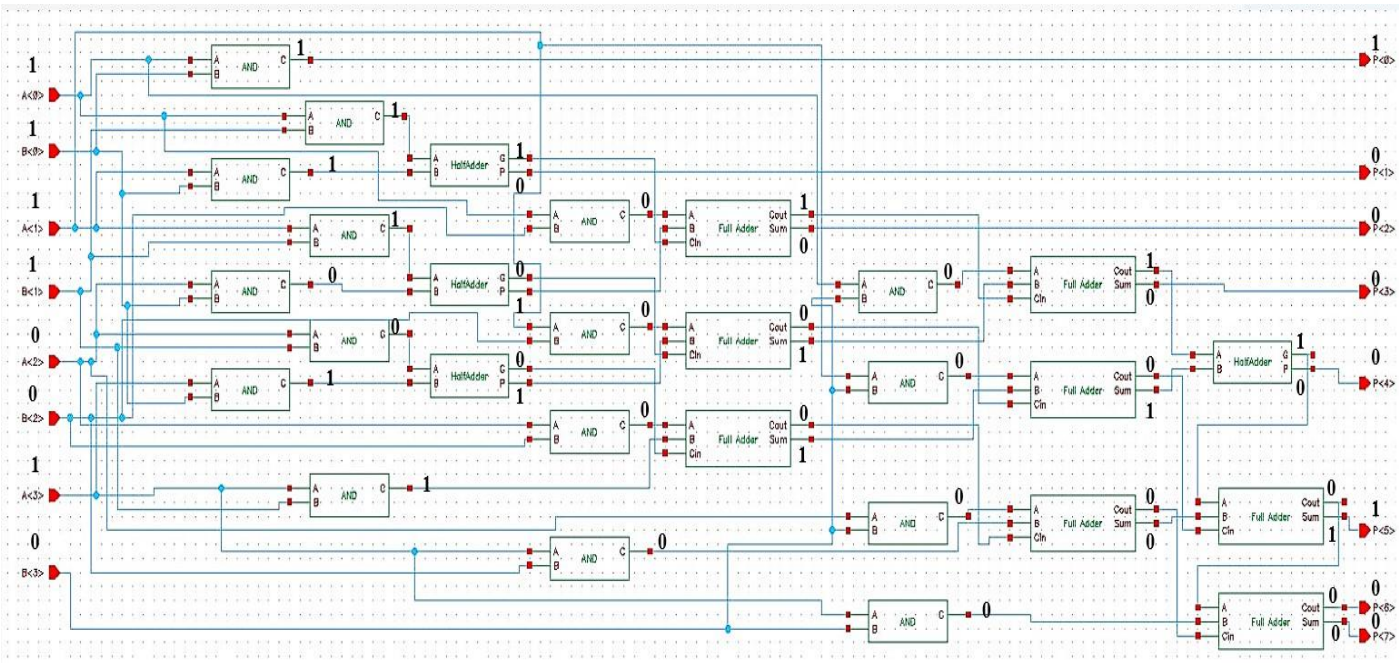

3.2.4.2 Output Waveform

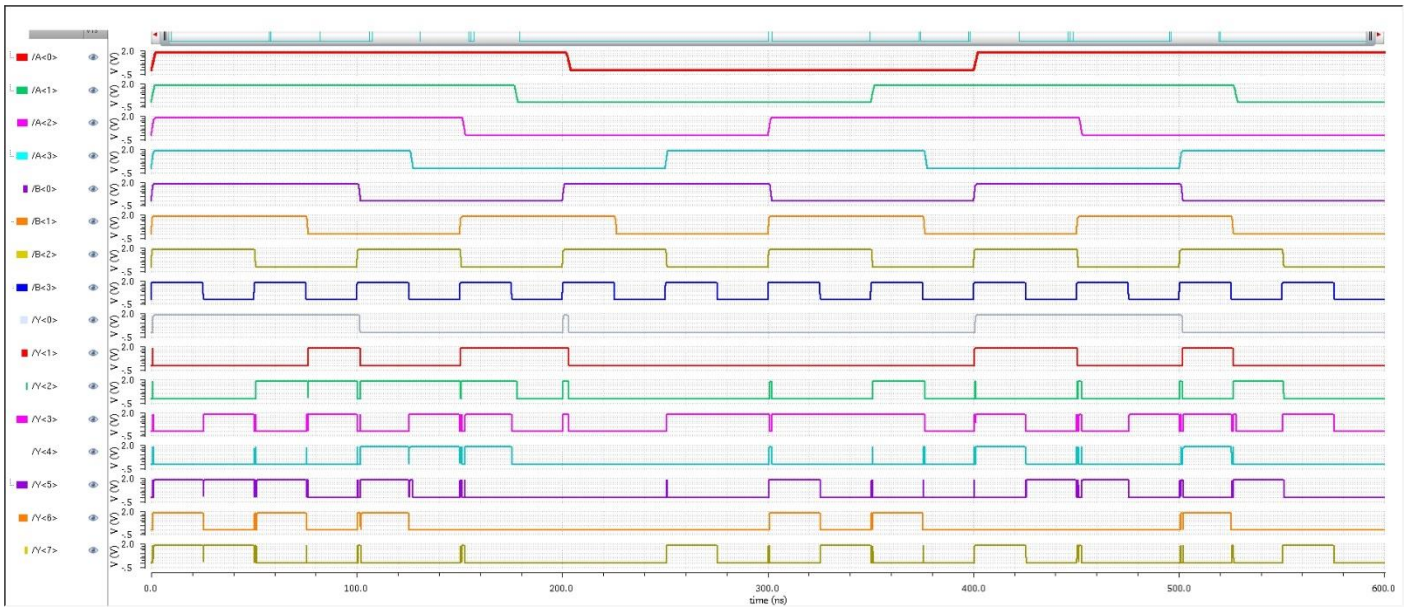

3.3 Description of Internal Components

3.3.1 4-bit Ripple Carry Adder

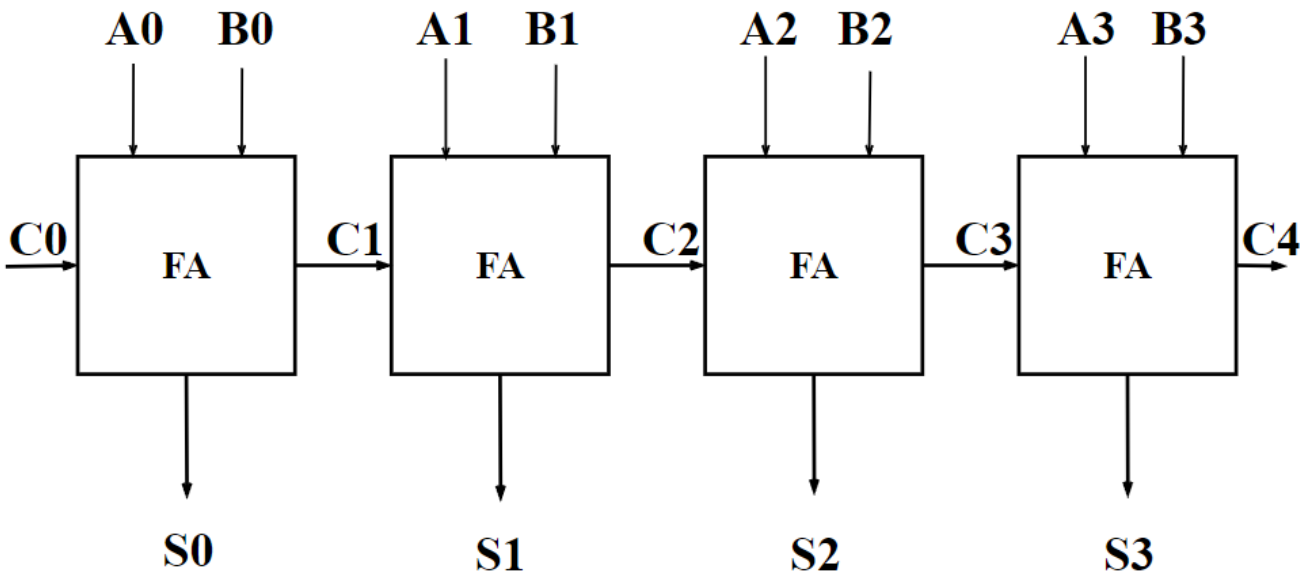

3.3.2 2x2 Vedic Multiplier

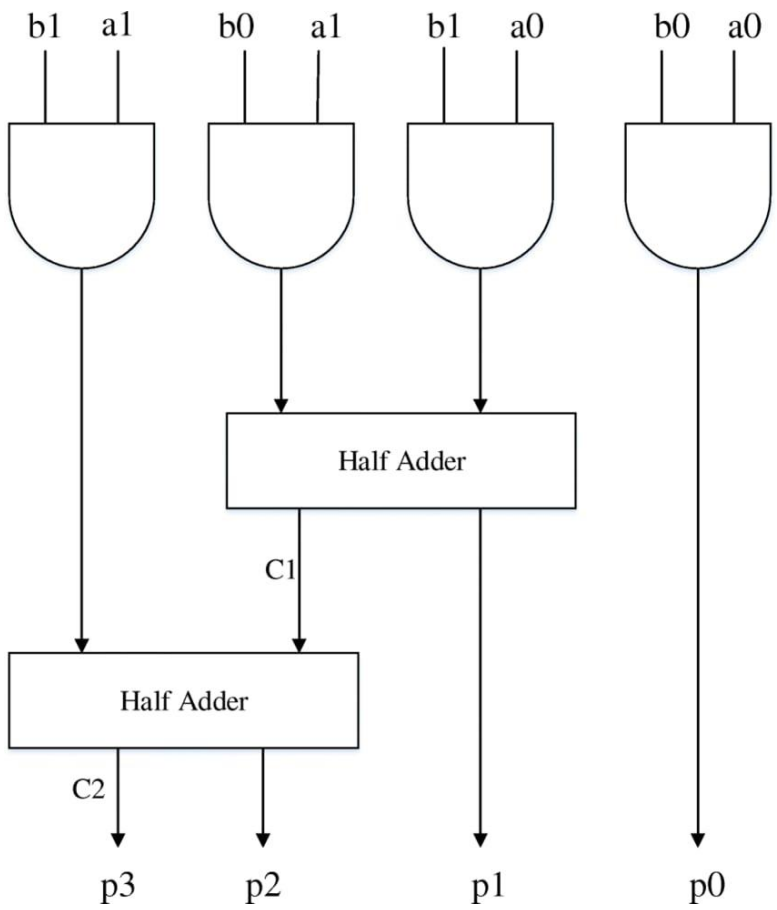

CHAPTER – 4 RESULTS OF THE PROJECT

4.1 Power Consumption

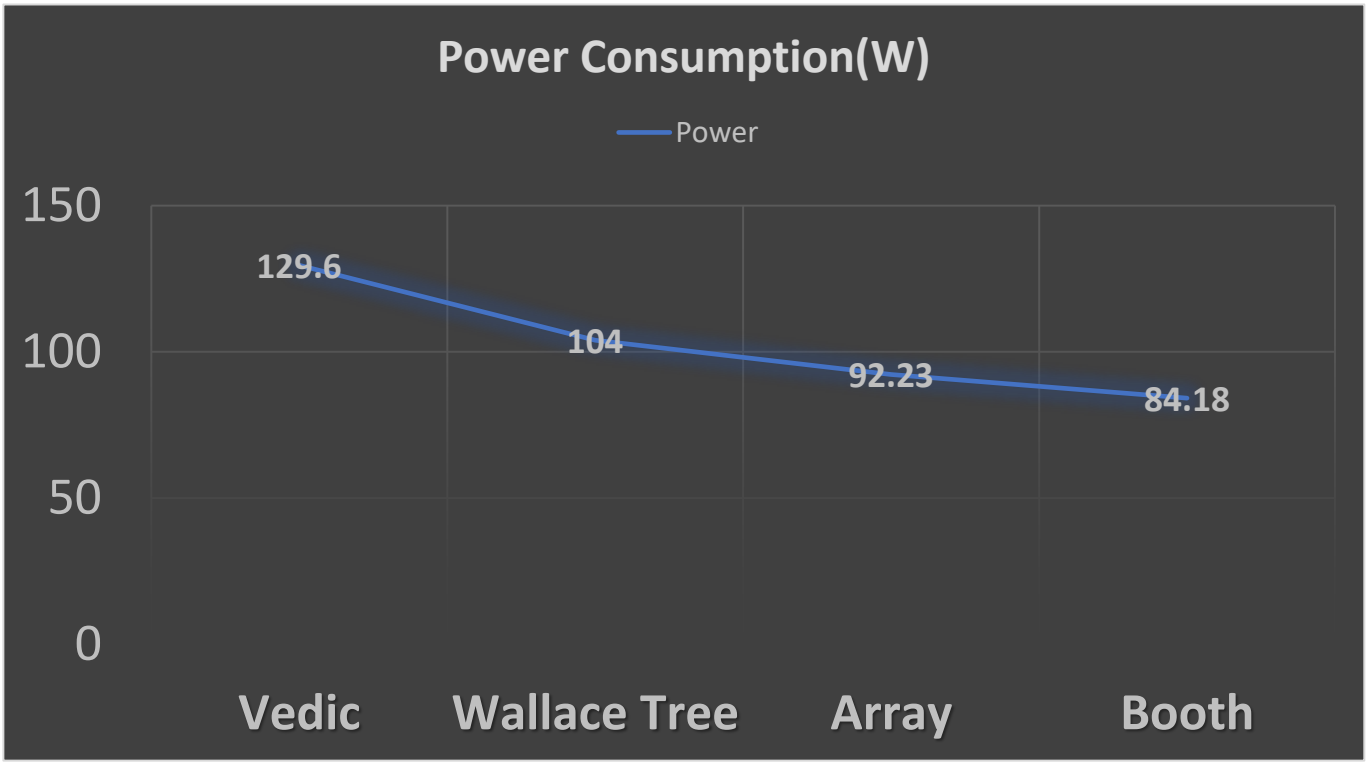

4.2 Transistor Count

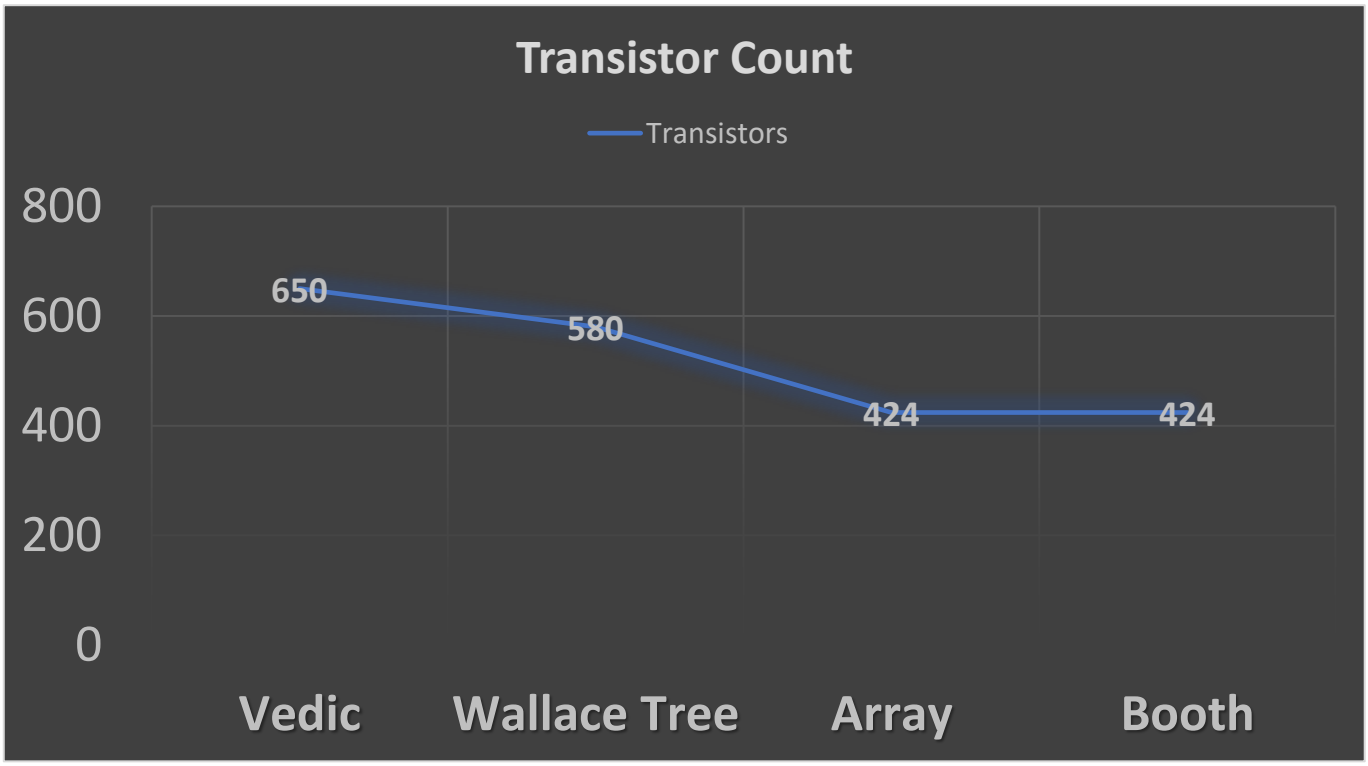

4.3 Delay

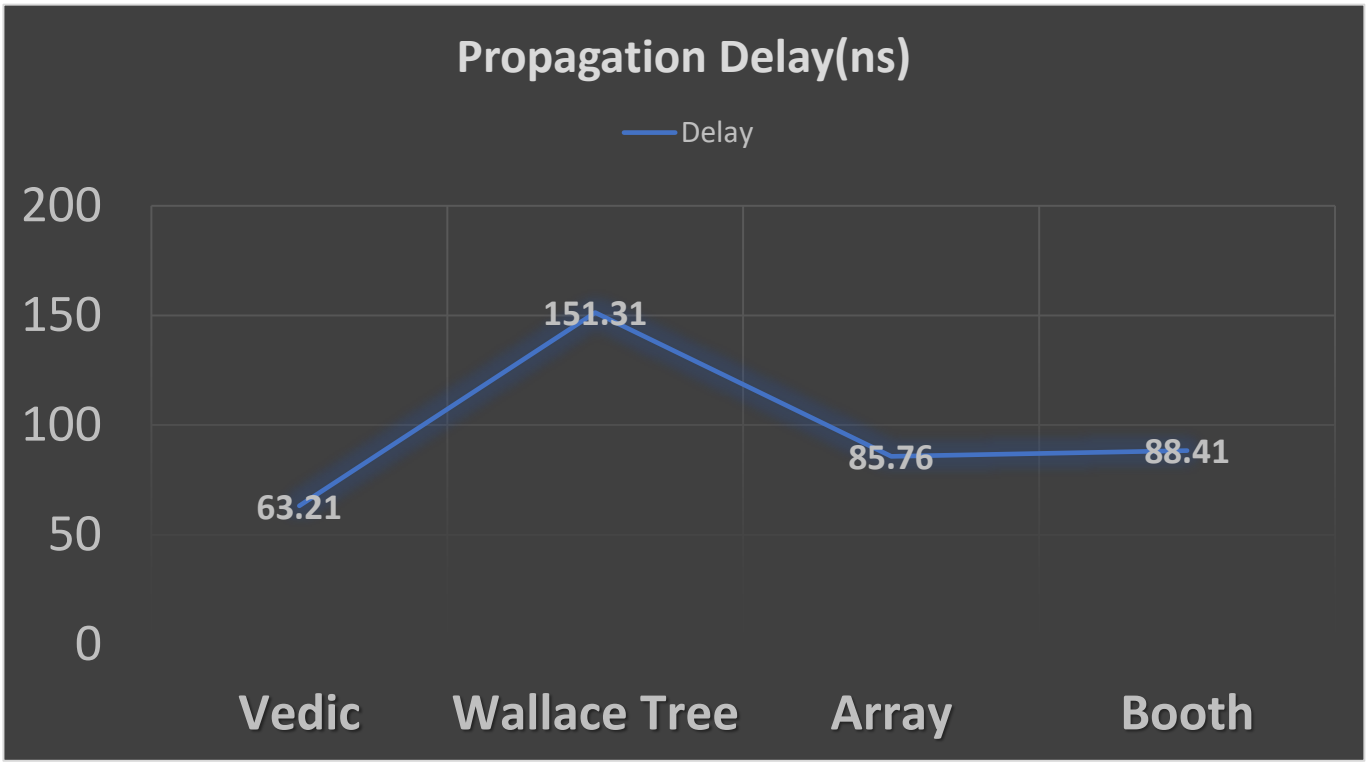
Propagation Delay(ns)
Delay
200
150
100
50
0
63.21
151.31
85.76
88.41
Vedic
Wallace Tree
Array
Booth

SUMMARY

	Vedic Multiplier	Wallace Tree Multiplier	Array Multiplier	Booth Multiplier
Power Consumption	129.6 µW	104 µW	92.23 µW	84.18 µW
Propagation Delay	63.21 ns	151.31 ns	85.76 ns	88.41 ns
Transistor Count	650	580	424	424

Vedic Multiplier:

- Exhibits the highest power consumption (129.6 µW) but offers a relatively fast operation (63.21 ns).
- Its parallel architecture contributes to a larger transistor count (650), trading off area for speed.

Wallace Tree Multiplier:

- Operates at moderate power (104 µW) but has the longest delay (151.31 ns), likely due to complex reduction stages.
- With 580 transistors, it balances area usage better than Vedic but sacrifices speed.

Array Multiplier:

- Consumes relatively low power (92.23 µW) and achieves a moderate delay (85.76 ns), making it a stable mid-range option.
- Requires the fewest transistors (424), reflecting its straightforward and regular structure.

Booth Multiplier:

- Achieves the lowest power consumption (84.18 µW) while maintaining a moderate delay (88.41 ns), ideal for power-sensitive scenarios.
- Shares the minimal transistor count (424) with the Array multiplier, indicating a compact design for handling signed numbers.

CONCLUSION

In this comparative study of four 4-bit multiplier architectures—Vedic, Wallace Tree, Array, and Booth—each design exhibits a unique set of trade-offs in power consumption, propagation delay, and transistor count, making them suitable for different target applications. The Vedic multiplier emerges as the fastest (63.21 ns), albeit with the highest power consumption (129.6 µW) and largest transistor count (650). Its speed-oriented design makes it ideal for real-time digital signal processing (DSP) applications, where rapid computations are critical and higher power budgets are acceptable.

The Wallace Tree multiplier, operating at moderate power (104 µW) but with the longest delay (151.31 ns), strikes a balance between area efficiency and performance. With a transistor count of 580, it can be employed in cryptography and other data-intensive operations where power-saving benefits are desired, and the latency overhead is tolerable. Meanwhile, the Array multiplier's straightforward structure results in lower power consumption (92.23 µW), a moderate delay (85.76 ns), and the smallest transistor count (424). This combination of simplicity and efficiency makes it a strong candidate for embedded systems, where hardware cost and predictable performance are important considerations.

Finally, the Booth multiplier achieves the lowest power consumption (84.18 µW) and a reasonable delay (88.41 ns), while also sharing the minimal transistor count (424) with the Array. Its ability to handle signed numbers efficiently renders it particularly suitable for battery-powered devices and microcontrollers that require compact, low-power arithmetic units. In essence, selecting the optimal multiplier for a given application involves weighing speed, power, and silicon area against each other, ensuring the most effective design choice for high-performance, power-sensitive, or area-constrained environments.